Figure 1-1: System Generation Flow Chart

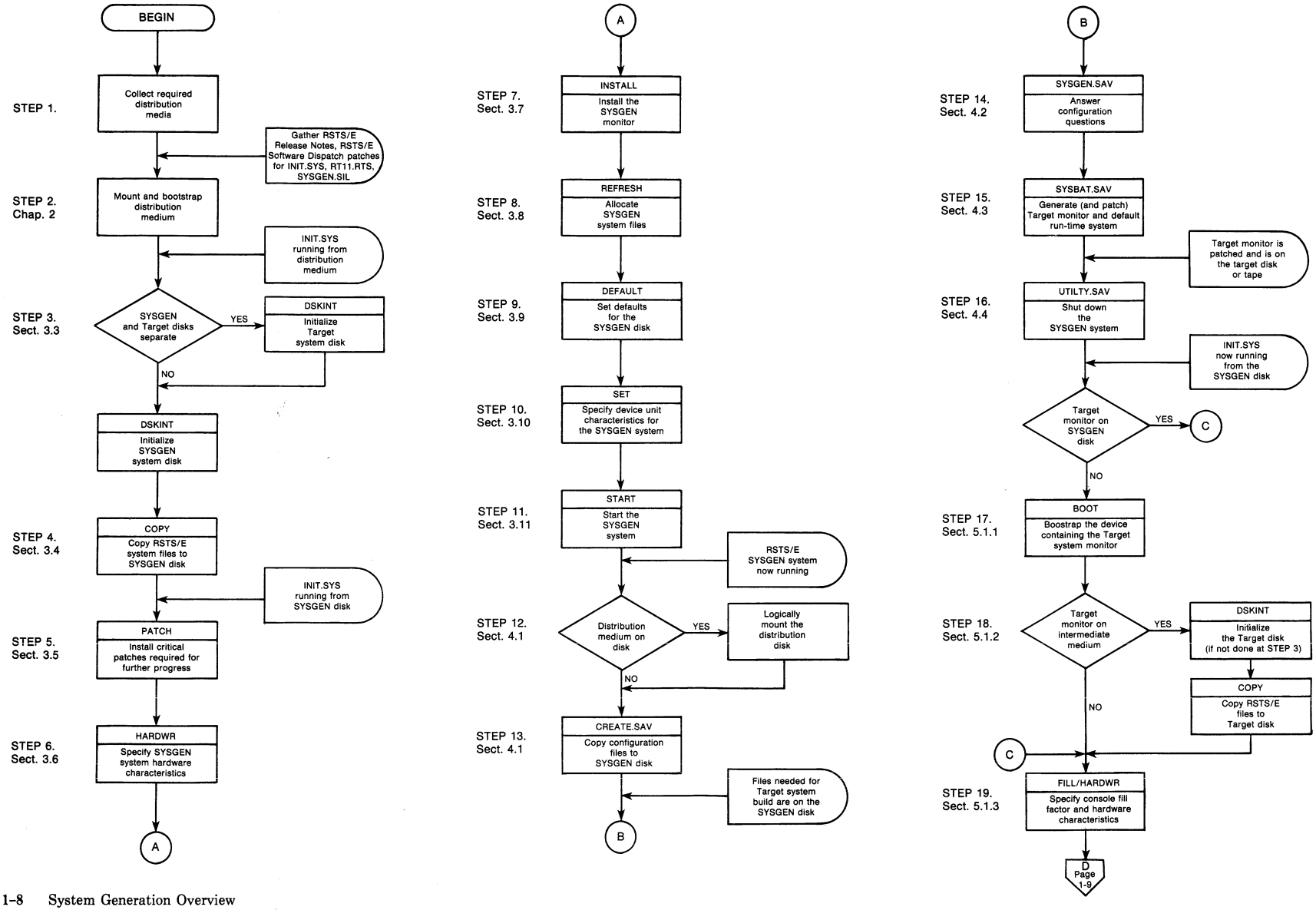
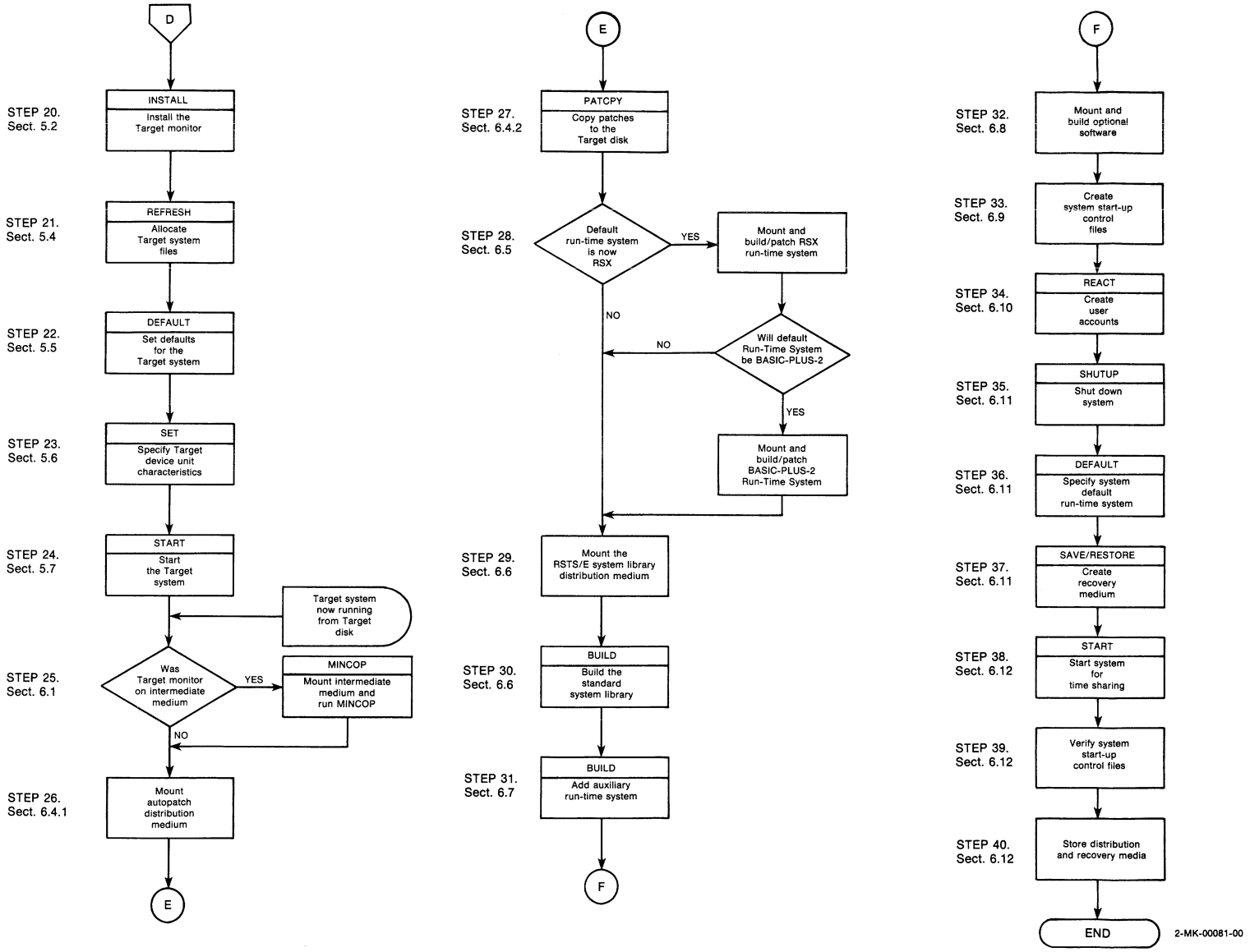
Figure 1-1: System Generation Flow Chart (Cont.)